Antenna THP 06 240 S

Antenna THP 06 240 S

General Specifications

Diameter	0.6m
Standard Colour	RAL 7035
Shroud	Low profile
Antenna Input	Interface for IEC waveguide R 220
Polarization	Single

Mechanical Characteristics

Pole	50-115 mm
Elevation-fine adjustment	+/- 15 deg
Azimuth-fine adjustment	+/- 20 deg
Side struts, included	0
Side struts, optional	0
Net weight	12 Kg
Radome	Rigid plastic
Wind velocity Operational	45 m/s
Wind velocity Survival	70 m/s
Wind deflection	<0.3 times the -3 dB beamwidth
(with a wind velocity of 45 m/s)	Specified wind deflection applies for 115 mm dia mounting pipe only

Antenna Dimensions

(pole mount included)

Height	653.0 mm
Width	719.0 mm
Depth	330.5 mm

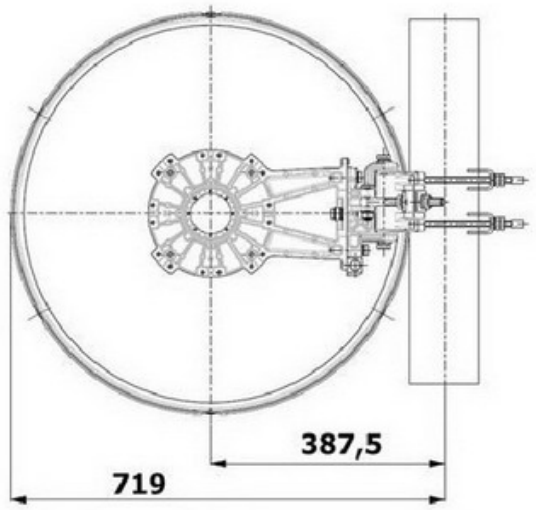

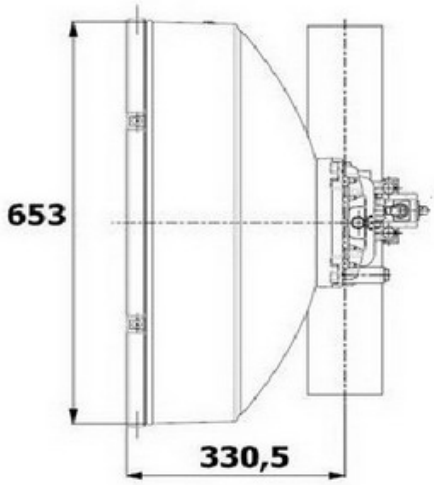

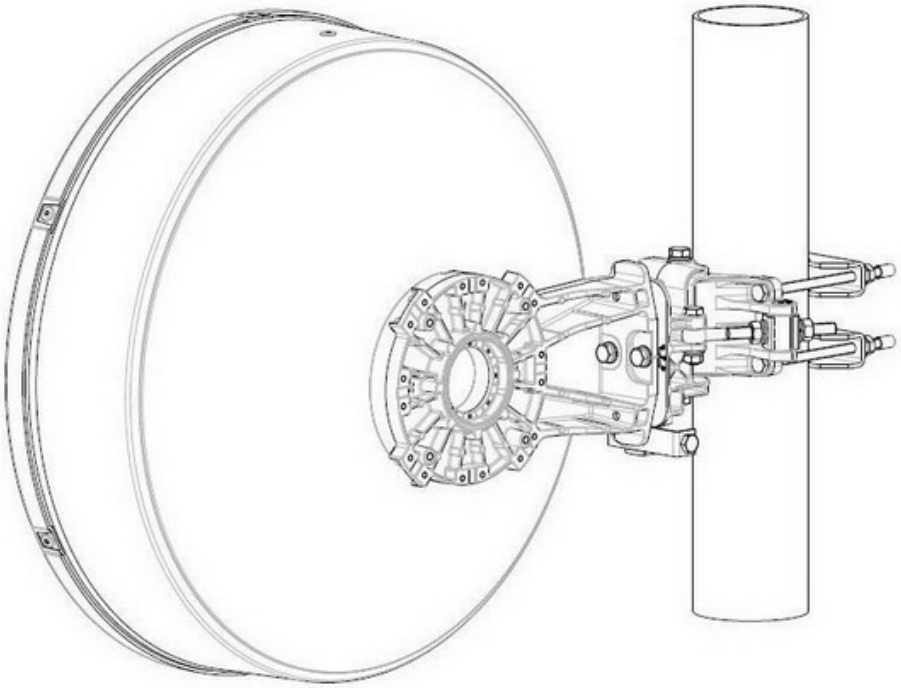

Wind forces at wind velocity survival rating and with 25 mm (1") ice load

Axial force	1444 N
Side force	715 N
Twisting Moment	527 N m

Maximum forces exerted on a supporting structure as a result of wind (survival rating) from the most critical direction for each parameter. These values may not occur simultaneously. All forces are referred to the mounting pipe of 115 mm diameter.

Electrical Characteristics

Frequency range	24 - 24.25 GHz
Gain, low band	40.6 dBi
Gain, mid band	40.6 dBi
Gain, top band	40.6 dBi
Return Loss	14.0 dB
VSWR	1.5
HPBW	1.7
Front to back ratio	68.0 dB
Isolation	NA
XPD	30 dB
Electrical Compliance	Class 3
	ETSI 302 217

Shipping Information

Gross weight	15 Kg
Height	420 mm
Depth	750 mm
Width	750 mm

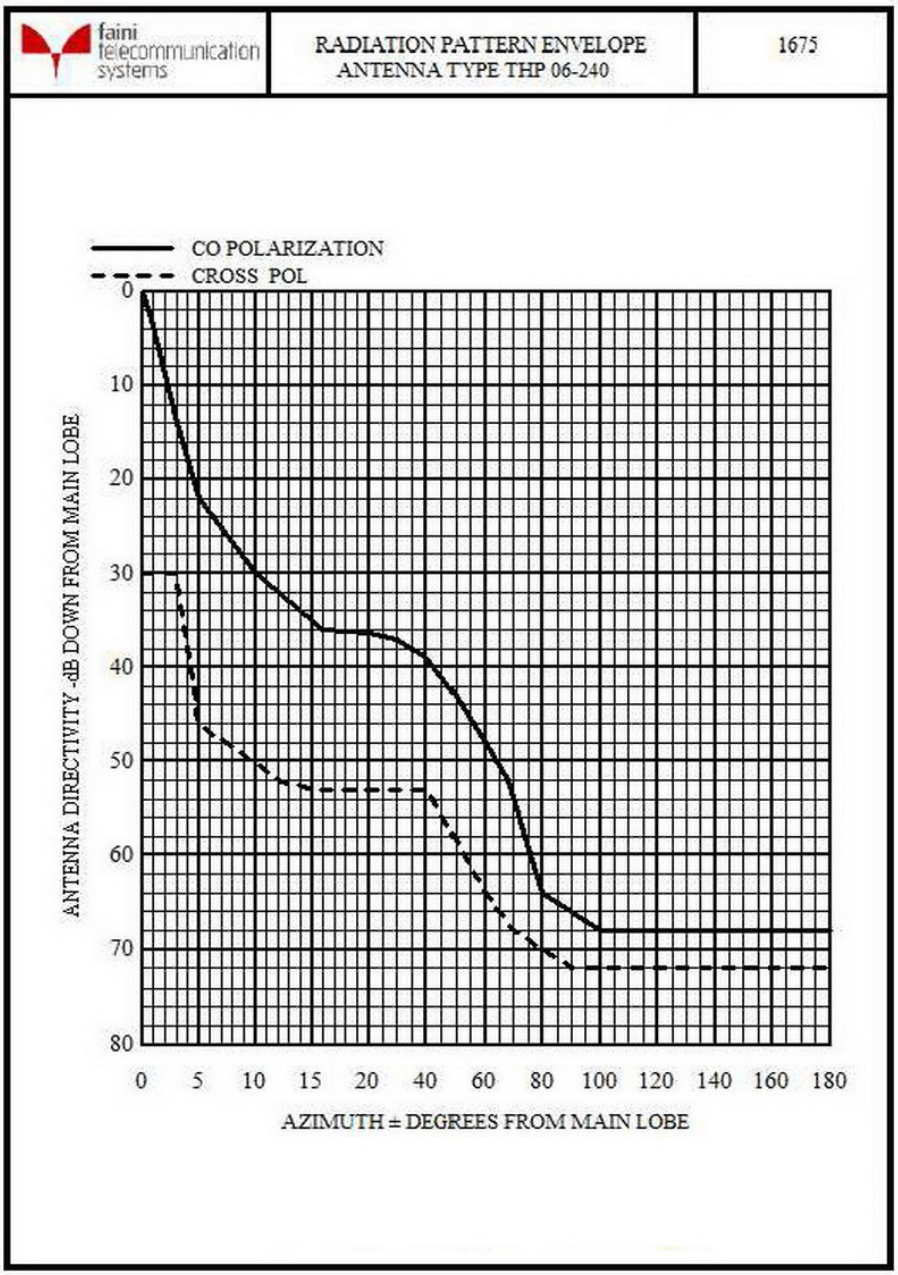
faini telecommunication systems
RADIATION PATTERN ENVELOPE
ANTENNA TYPE THP 06-240
1675
CO POLARIZATION
CROSS POL
ANTENNA DIRECTIVITY -dB DOWN FROM MAIN LOBE
0
10
20
30
40
50
60
70
80
0 5 10 15 20 40 60 80 100 120 140 160 180
AZIMUTH ± DEGREES FROM MAIN LOBE